REMOTE LOGIN

- Remote login is a process of logging on to remote site (computer) and using the services available on the remote computer.
- The Concept of remote login is explained in the diagram as follows:

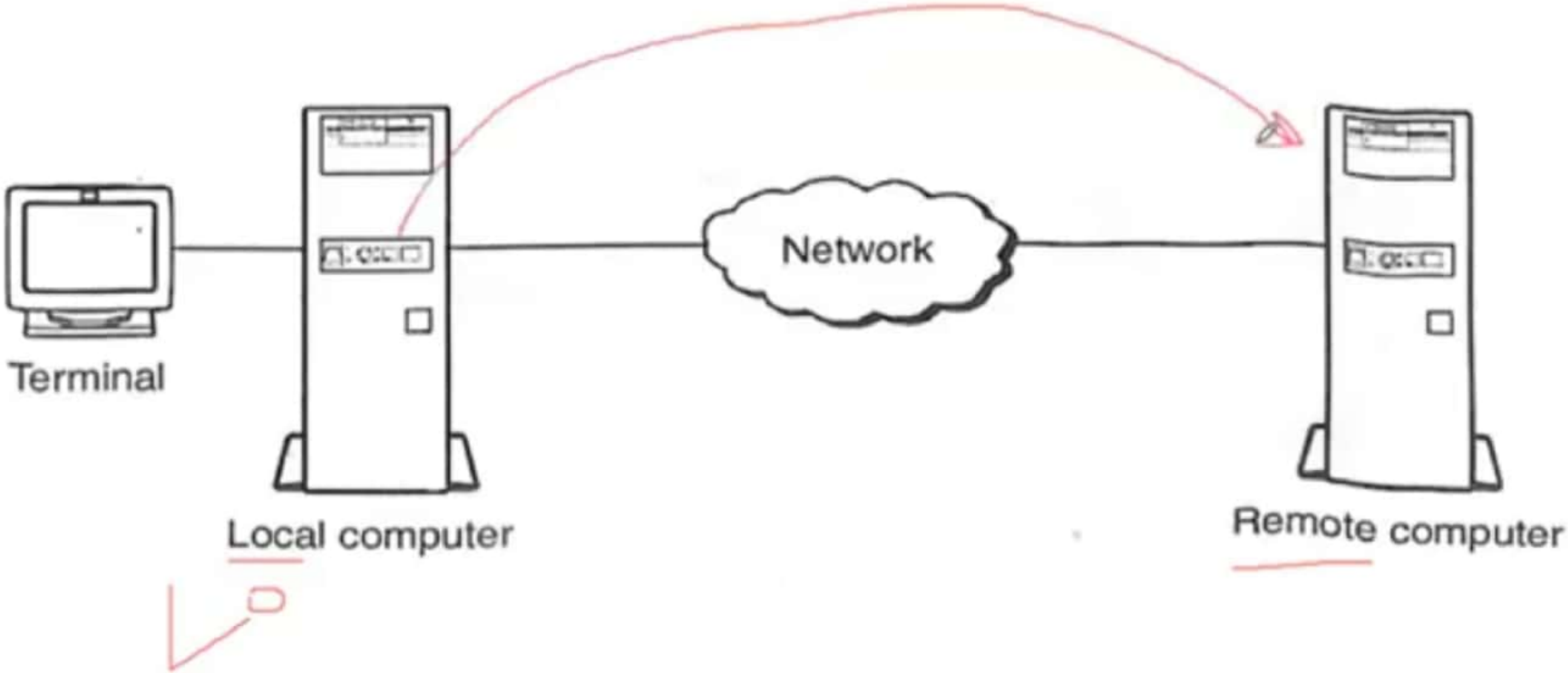

Scanned with CamScanner

TELNET

- TELNET stands for TErminaL NETwork. TELNET is a protocol that enables one computer to connect to remote computer.
- It is a standard TCP/IP protocol for virtual terminal service given by ISO.
- The user's computer, which initiates the connection, is referred to as the local computer.
- The computer being connected to, which accepts the connection, is referred to as the remote computer. T
- he remote computer can be physically located in the next room, the next town or in another country.
- Once the connection is established between the local and remote computer, the local computer emulates the remote computer.

Scanned with CamScanner

TELNET

- The user's local computer will display what is taking place on the remote computer during telnet session.
- Telnet operates on a client/server principle.
- The local computer uses a telnet client program to establish the connection and display data on the local computer's monitor.
- The remote computer uses telnet server program to accept the connection and to send responses to requests for information back to the local computer.

Scanned with CamScanner

REMOTE LOGIN PROCEDURE

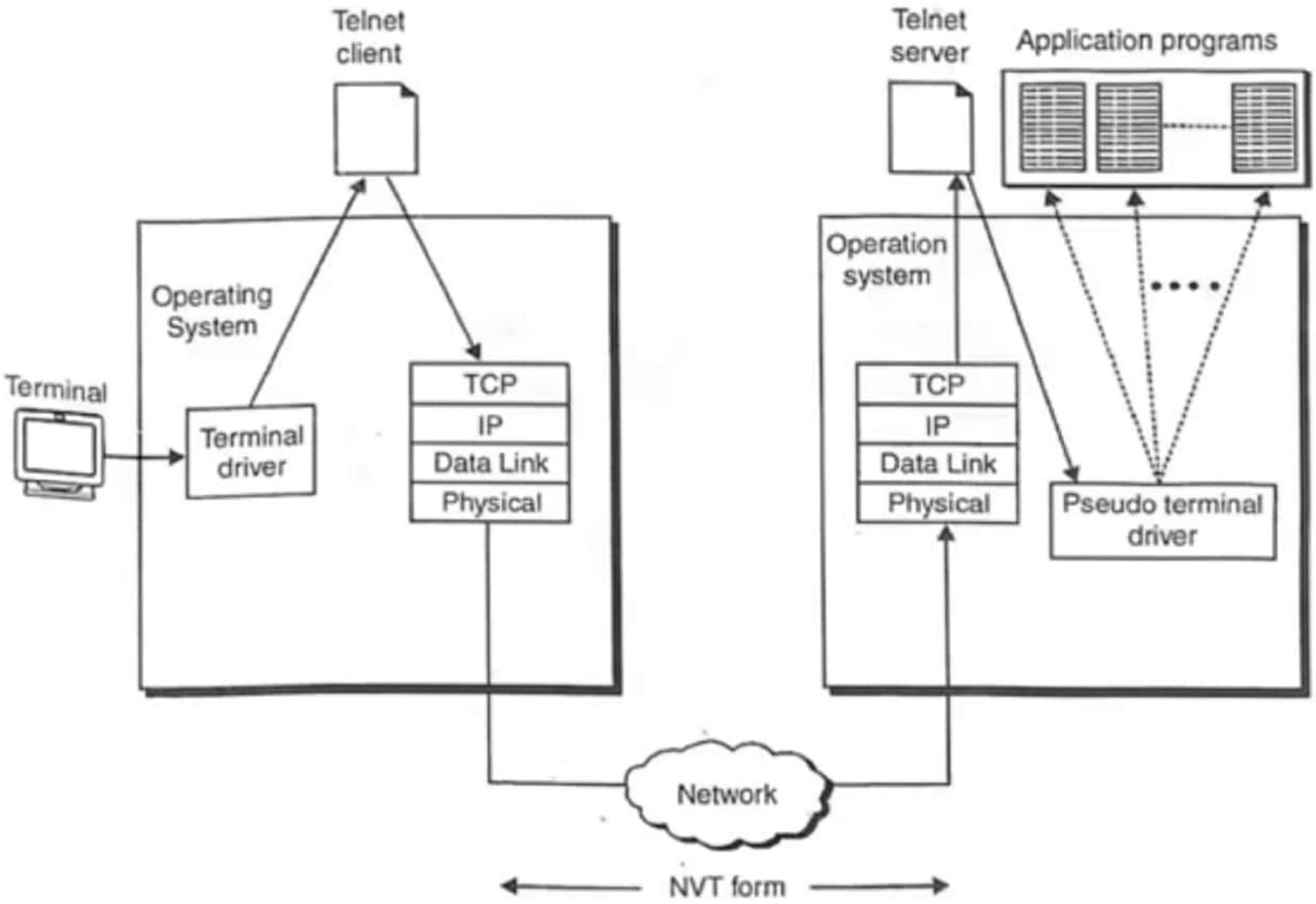

Scanned with CamScanner

NVT CHARACTER SET

- With the Network virtual terminal (NVT) character set, the client TELNET translates characters (data or commands) that come from the local terminal into NVT form and delivers them to the network.
- The server TELNET translates data and commands from NVT form into the form acceptable by the remote computer.
- NVT uses two sets of characters, one for data and the other for control. Both are 8-bit bytes.
- For data, NVT is an 8-bit character set in which the 7 lowest order bits are the same as ASCII and the highest order bit is 0, as shown in the figure as follows:

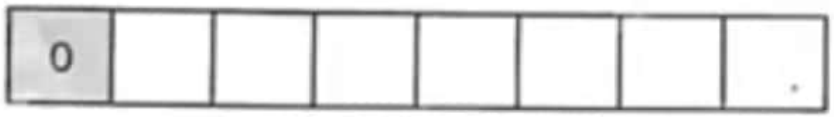

Data character

Control character

Scanned with CamScanner

TELNET COMMANDS

- Telnet commands are identified by a prefix character, IAC (Interpret as Command) having code 255.
- IAC is followed by the command and option codes. Basic format of a command is shown in the figure as follows:

IAC	Command code	Option code

Scanned with CamScanner

TELNET COMMANDS

➢ Some of the important Telnet commands are listed in the table below:

Character	Decimal	Binary	Meaning
WILL	251	11111011	1. Offering to enable. 2. Accepting a request to enable.
WON'T	252	11111100	1. Rejecting a request to enable. 2. Offering to disable. 3. Accepting a request to disables.
DO	253	11111101	1. Approving an offer to enable. 2. Requesting to enable.
DON'T	254	11111110	1. Disapproving an offer to enable 2. Approving an offer to disable. 3. Requesting to disable.

Scanned with CamScanner

TELNET COMMANDS OPTIONS

Code	Option	Meaning
0	Binary	Interpret as 8-bit binary transmission.
1	Echo	Echo the data received on one side to the other.
3	Suppress go ahead	Suppress go ahead signal after data.
5	Status	Request the status of TELNET
6	Timing mark	Define the timing marks
8	Line width	Specifies the line width
9	Page size	Specifies the number of lines in a page
24	Terminal type	Set the terminal type
32	Terminal speed	Set the terminal speed
34	Line mode	Change to line mode

Scanned with CamScanner

TELNET EXAMPLE

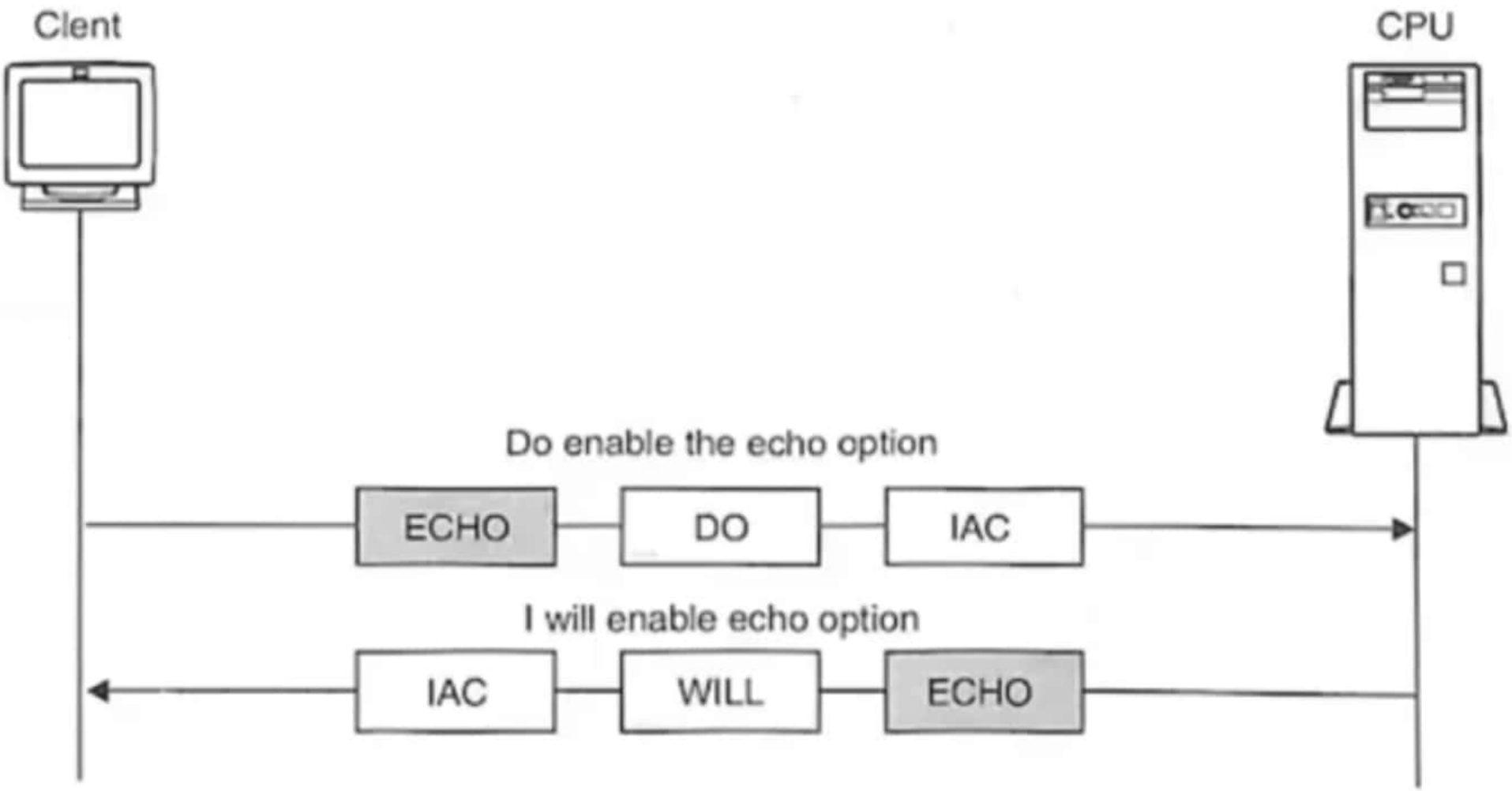

Scanned with CamScanner

TELNET MODES OF OPERATION

1. Default mode
2. Character mode
3. Line mode

Scanned with CamScanner